SEMITRANS® M

Single Switch Power MOSFET Modules with Built-in Driver Circuit

SKM 111 ARC[3]) SKM 181 C
SKM 121 ARC[3]) SKM 181 FC
SKM 141 C SKM 191 C
SKM 151 C SKM 191 FC
SKM 151 FC

T-39-15

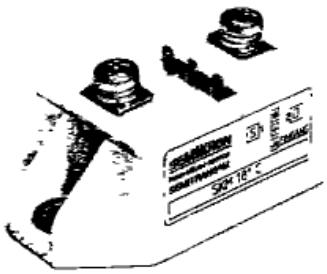

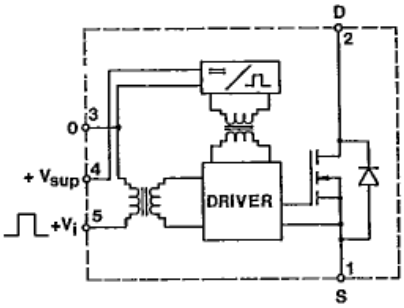

Absolute Maximum and Minimum Ratings[1])

Symbol	Rating	Value min.	Value max.	Unit
V_{sup}	Driver supply voltage	–	18	V
V_i	Input signal voltage	– 0,3	V_{sup} + 0,3	V
V_{isol}	Input–Output	–	2500	V~
T_{case}	Case temperature[2])	– 40	+ 85	°C
T_{stg}	Storage temperature	– 40	+ 85	°C

Operating Conditions

Symbol	Rating	Value min.	Value max.	Unit
V_{sup}	Driver supply voltage	8	15	V
V_{iL}	Logic 0 input voltage (LOW)	–	0,14 · V_{sup}	V
V_{iH}	Logic 1 input voltage (HIGH)	0,86 · V_{sup}	–	V
f	Operating frequency	0	50[4])	kHz
t_p	Input pulse duration	0,5[5])	–	µs
$t_{p(off)}$	Input pulse off-time	0,5[5])	–	µs

Electrical Characteristics @ T_{case} = 25 °C

Symbol	Rating	Value min.	Value max.	Unit
I_{sup}	Driver supply current			
	quiescent; V_{sup} = 15 V	–	19	mA
	operating	see Fig. 3		
I_i	Input signal current	–	1	µA

Switching times (see Fig. 62)

Module	Rating V_{DS} V	Test conditions V_{DD} V	I_D A	Typical switching times t_{don} ns	t_r ns	t_{doff} µs	t_f ns
SKM 111 ARC	100	50	130	280	500	1,5	600
SKM 121 ARC	200	100	80	280	220	1,8	450
SKM 141 C	400	200	60	250	120	2	450
SKM 151 C	500	250	36	250	120	2	450
SKM 151 FC	500	250	36	350	160	2	400
SKM 181 C	800	400	23	350	130	2,3	400
SKM 181 FC	800	400	23	330	120	2,5	430
SKM 191 C	1000	500	17	350	150	2,5	450
SKM 191 FC	1000	500	18	350	150	2,5	450

1) For the ratings and characteristics of the power MOSFET output stages see the corresponding tables and diagrams

2) The case temperature of the module is the ambient temperature of the built-in driver

3) These types contain gate resistors to reduce di_D/dt

4) For higher operating frequencies please consult your SEMIKRON service office

5) Important! See also the technical explanations in Part A

Features

- Internal isolation between input and output stages
- The power supply for the driver must not be isolated
- CMOS compatible input

Typical Applications

- DC choppers
- AC motor drives
- Power supplies for LASERs
- Uninterruptible power supplies
- Ultrasonic generator
- Plasma cutting
- Inductive heating
- Electronic welding

This is an electrostatic discharge sensitive device (ESDS). Please observe the international standard IEC 747-1, Chapter IX.

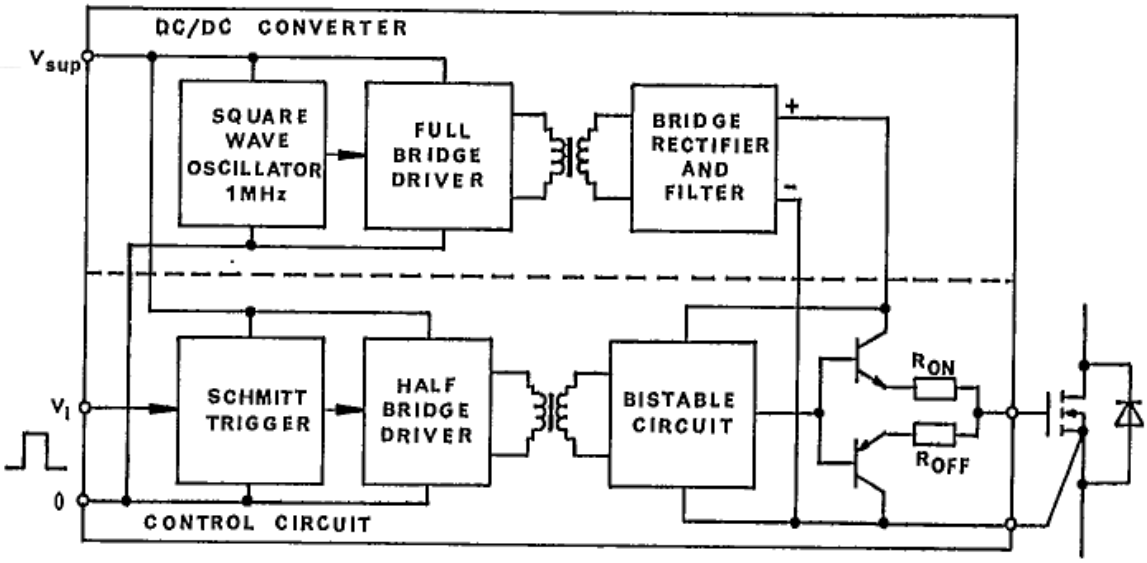

Fig. 61 Block diagram of the driver circuit

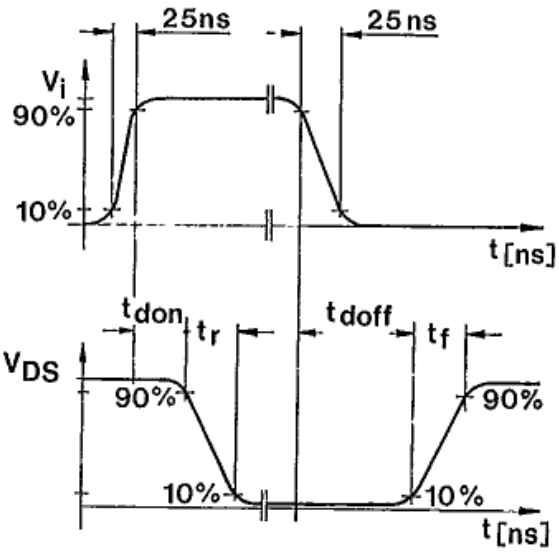

Fig. 62 Definitions of the switching times

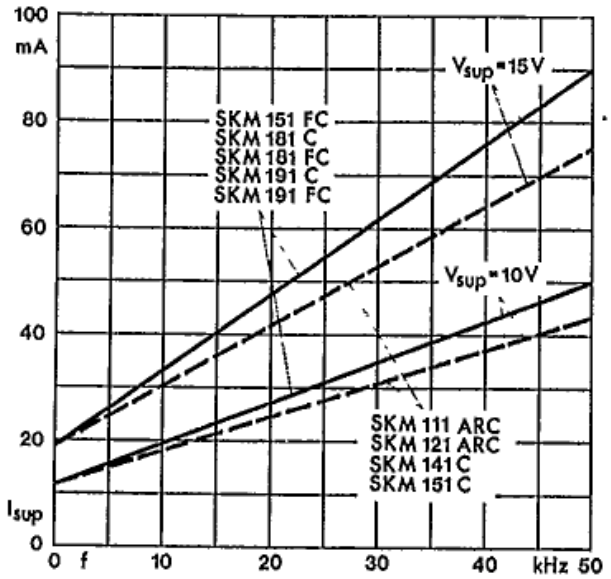

Fig. 63 Supply current vs. operating frequency